SECTION STR
STARTING SYSTEM

CONTENTS

BASIC INSPECTION

DIAGNOSIS AND REPAIR WORK FLOW

Work Flow (With GR8-1200 NI)

INFOID:0000000011735108

STARTING SYSTEM DIAGNOSIS WITH GR8-1200 NI

To test the starting system, use the following special service tool:

- GR8-1200 NI Multitasking battery and electrical diagnostic station

NOTE:

Refer to the diagnostic station Instruction Manual for proper starting system diagnosis procedures.

OVERALL SEQUENCE

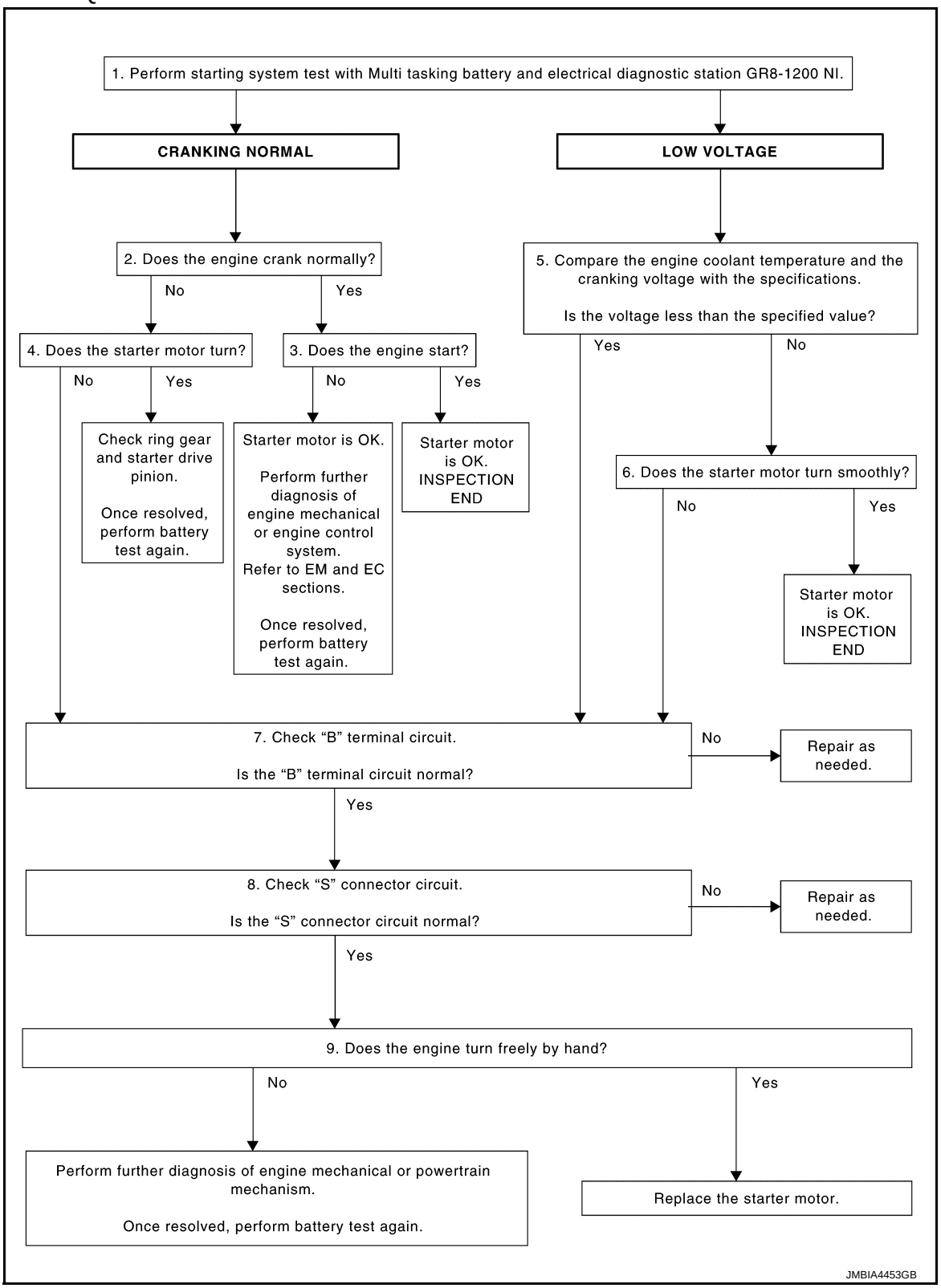

DETAILED FLOW

NOTE:

To ensure a complete and thorough diagnosis, the battery, starter motor and alternator test segments must be done as a set from start to finish.

1. DIAGNOSIS WITH MULTITASKING BATTERY AND ELECTRICAL DIAGNOSTIC STATION GR8-1200 NI

Perform the starting system test with Multitasking battery and electrical diagnostic station GR8-1200 NI. For details and operating instructions, refer to diagnostic station Instruction Manual.

Test result

CRANKING NORMAL>>GO TO 2.
LOW VOLTAGE>>GO TO 5.
CHARGE BATTERY>>Perform the slow battery charging procedure. (Initial rate of charge is 10A for 12 hours.) Perform battery test again. Refer to diagnostic station instruction manual.
REPLACE BATTERY>>Before replacing battery, clean the battery cable clamps and battery posts. Perform battery test again. Refer to diagnostic station instruction manual. If second test result is “REPLACE BATTERY”, then do so. Perform battery test again to confirm repair.

2. CRANKING CHECK

Check that the starter motor operates correctly.

Does the engine crank normally?

YES >> GO TO 3.
NO >> GO TO 4.

3. ENGINE START CHECK

Check that the engine starts.

Does the engine start?

YES >> Starter motor is OK. INSPECTION END
NO >> Perform further diagnosis of engine mechanical or engine control system. Refer EM and EC sections. Once resolved, perform battery test again.

4. STARTER MOTOR ACTIVATION

Check that the starter motor operates.

Does the starter motor turn?

YES >> Check ring gear and starter motor drive pinion. Once resolved, perform battery test again.
NO >> GO TO 7.

5. COMPARISON BETWEEN ENGINE COOLANT AND CRANKING VOLTAGE

Compare the engine coolant temperature and the cranking voltage with the specifications.

Minimum Specification of Cranking Voltage Referencing Coolant Temperature

Engine coolant temperature [°C (°F)]	Voltage [V]
–30 to –20 (–22 to –4)	8.6
–19 to –10 (–2 to 14)	9.1
–9 to 0 (16 to 32)	9.5
More than 1 (More than 34)	9.9

Is the voltage less than the specified value?

YES >> GO TO 7.
NO >> GO TO 6.

6. STARTER OPERATION

Check the starter operation status.

Does the starter motor turn smoothly?

YES >> Starter motor is OK. INSPECTION END
NO >> GO TO 7.

7. “B” TERMINAL CIRCUIT INSPECTION

Check “B” terminal circuit. Refer to STR-12, "Diagnosis Procedure".

Is “B” terminal circuit normal?

YES >> GO TO 8.
NO >> Repair as needed.

8. “S” CONNECTOR CIRCUIT INSPECTION

Check “S” connector circuit. Refer to STR-13, "Diagnosis Procedure".

Is “S” connector circuit normal?

YES >> GO TO 9.
NO >> Repair as needed.

9. ENGINE ROTATION STATUS

Check that the engine can be rotated by hand.

Does the engine turn freely by hand?

YES >> Replace starter motor. Refer to STR-25, "M/T : Removal and Installation" (M/T) or STR-26, "A/T : Removal and Installation" (A/T).
NO >> Perform further diagnosis of engine mechanical or powertrain mechanism. Once resolved, perform battery test again using Multitasking battery and electrical diagnostic station GR8-1200 NI. Refer to the diagnostic station Instruction Manual for proper testing procedures.

Work Flow (Without GR8-1200 NI)

INFOID:0000000011735109

OVERALL SEQUENCE

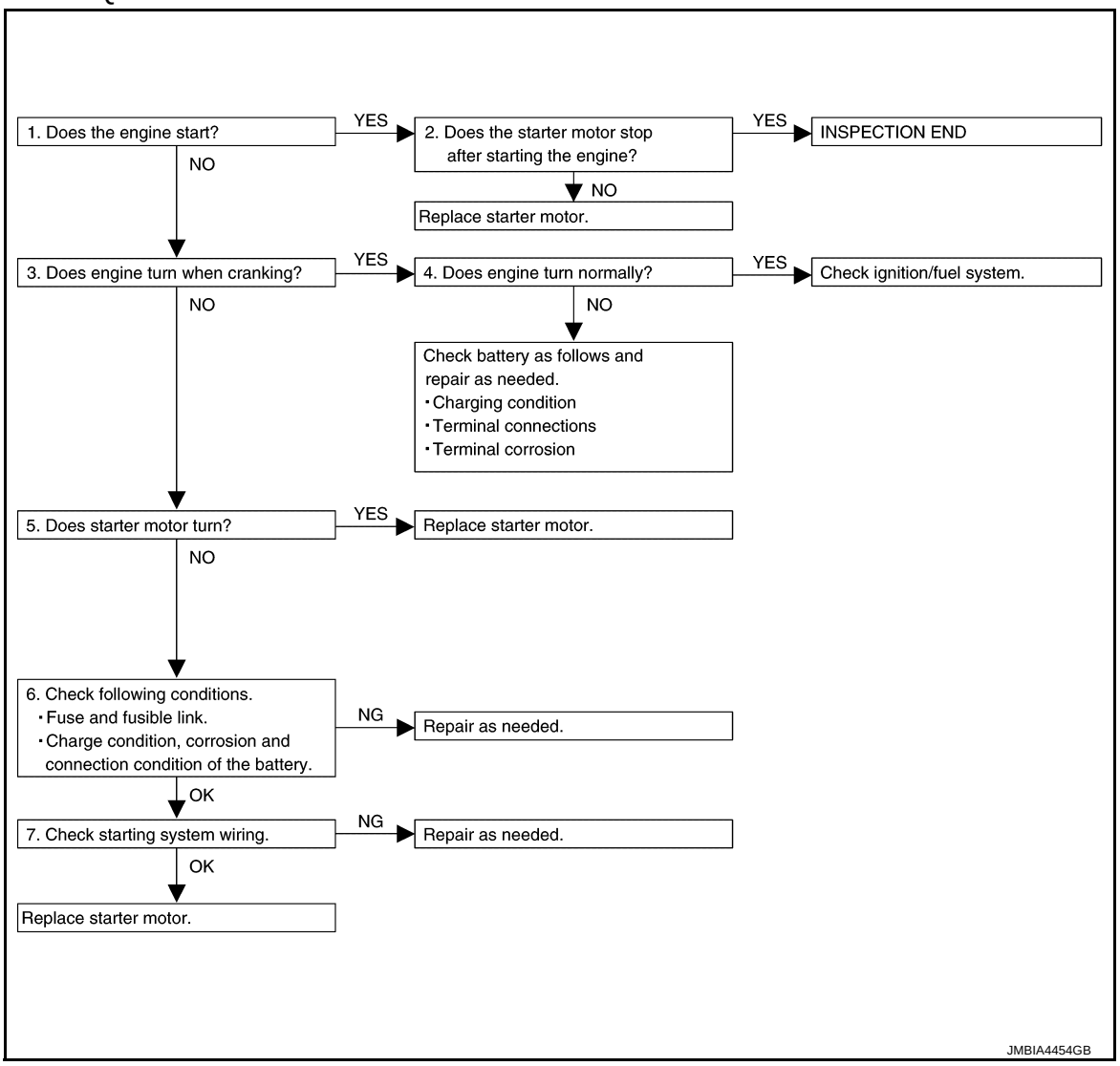

DETAILED FLOW

NOTE:

If any malfunction is found, immediately disconnect the battery cable from the negative terminal.

1. CHECK ENGINE START

Crank the engine and check that the engine starts.

Does the engine start?

YES >> GO TO 2.
NO >> GO TO 3.

2. CHECK THAT THE STARTER MOTOR STOPS

Check that the starter motor stops after starting the engine.

Does the starter motor stop?

YES >> INSPECTION END
NO >> Replace starter motor. Refer to STR-25, "M/T : Removal and Installation" (M/T) or STR-26, "A/T : Removal and Installation" (A/T).

3. CHECK THAT THE ENGINE TURNS WHEN CRANKING

Check that the engine turns when cranking.

Does engine turn when cranking?

YES >> GO TO 4.
NO >> GO TO 5.

4. CHECK THE ENGINE SPEED WHEN CRANKING

Check that the engine speed is not low when cranking.

Does engine turn normally?

YES >> Check ignition/fuel system.
NO >> Check charge condition, corrosion and connection condition of the battery. Refer to PG-3, "Work Flow".

5. CHECK STARTER MOTOR ACTIVATION

Check that the starter motor runs at cranking.

Does starter motor turn?

YES >> Replace starter motor. Refer to STR-25, "M/T : Removal and Installation" (M/T) or STR-26, "A/T : Removal and Installation" (A/T).
NO >> GO TO 6.

6. CHECK POWER SUPPLY CIRCUIT

Check the following conditions.
- Fuse and fusible link
- Charge condition, corrosion and connection condition of the battery. Refer to PG-3, "Work Flow".

Are these inspection results normal?

YES >> GO TO 7.
NO >> Repair as needed.

7. CHECK STARTING SYSTEM WIRING

Check the following.
- “B” terminal circuit. Refer to STR-12, "Diagnosis Procedure".
- “S” connector circuit. Refer to STR-13, "Diagnosis Procedure".

Are these inspection results normal?

YES >> Replace starter motor. Refer to STR-25, "M/T : Removal and Installation" (M/T) or STR-26, "A/T : Removal and Installation" (A/T).
NO >> Repair as needed.

SYSTEM DESCRIPTION

STARTING SYSTEM

M/T

M/T : System Diagram

INFOID:0000000011735110

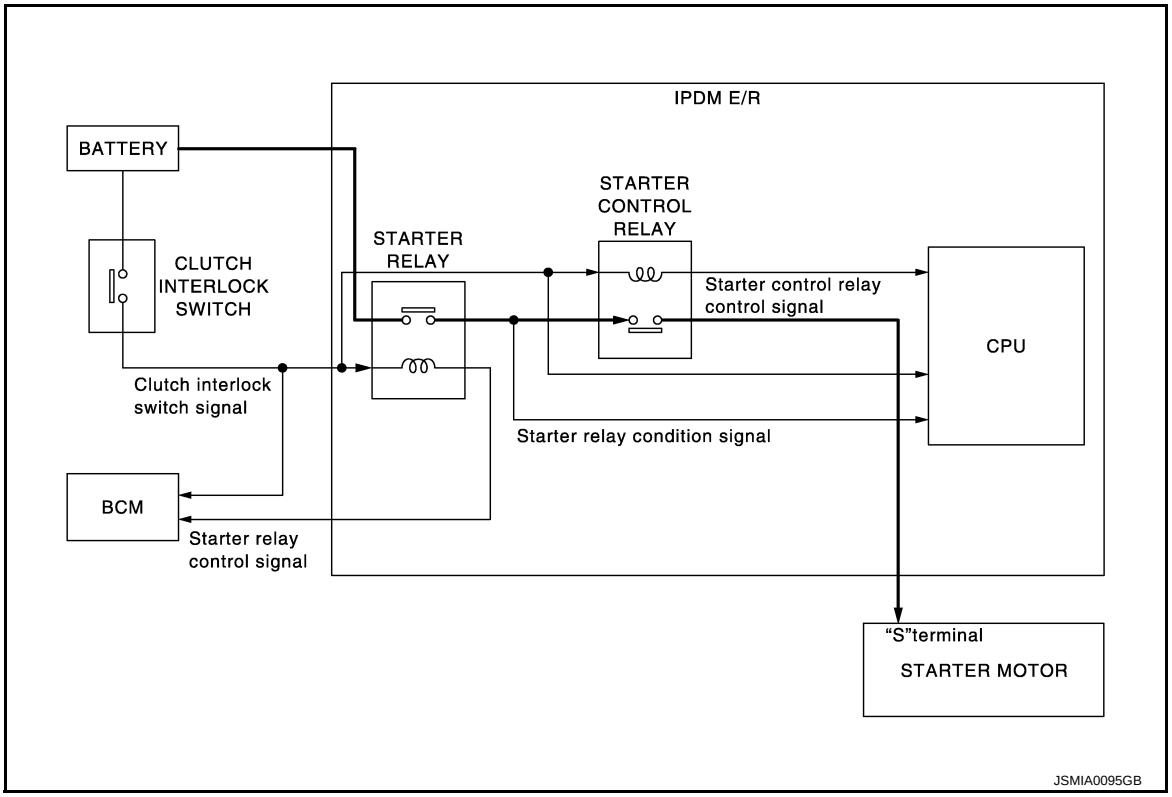

M/T : System Description

INFOID:0000000011735111

- When the clutch interlock switch is turned ON, power is supplied to starter relay and starter control relay. And BCM and IPDM E/R (CPU) detect clutch interlock switch condition by the inputted signal.
- When starter operating condition is satisfied, IPDM E/R turns starter control relay ON by starter control relay control signal.
- When engine cranking condition is satisfied, BCM turns starter relay ON by starter relay control signal.
- Then battery power is supplied to starter motor ("S" terminal) through starter control relay and starter relay. And IPDM E/R (CPU) detect starter relay condition by the inputted signal.

M/T : Component Parts Location

INFOID:0000000011735112

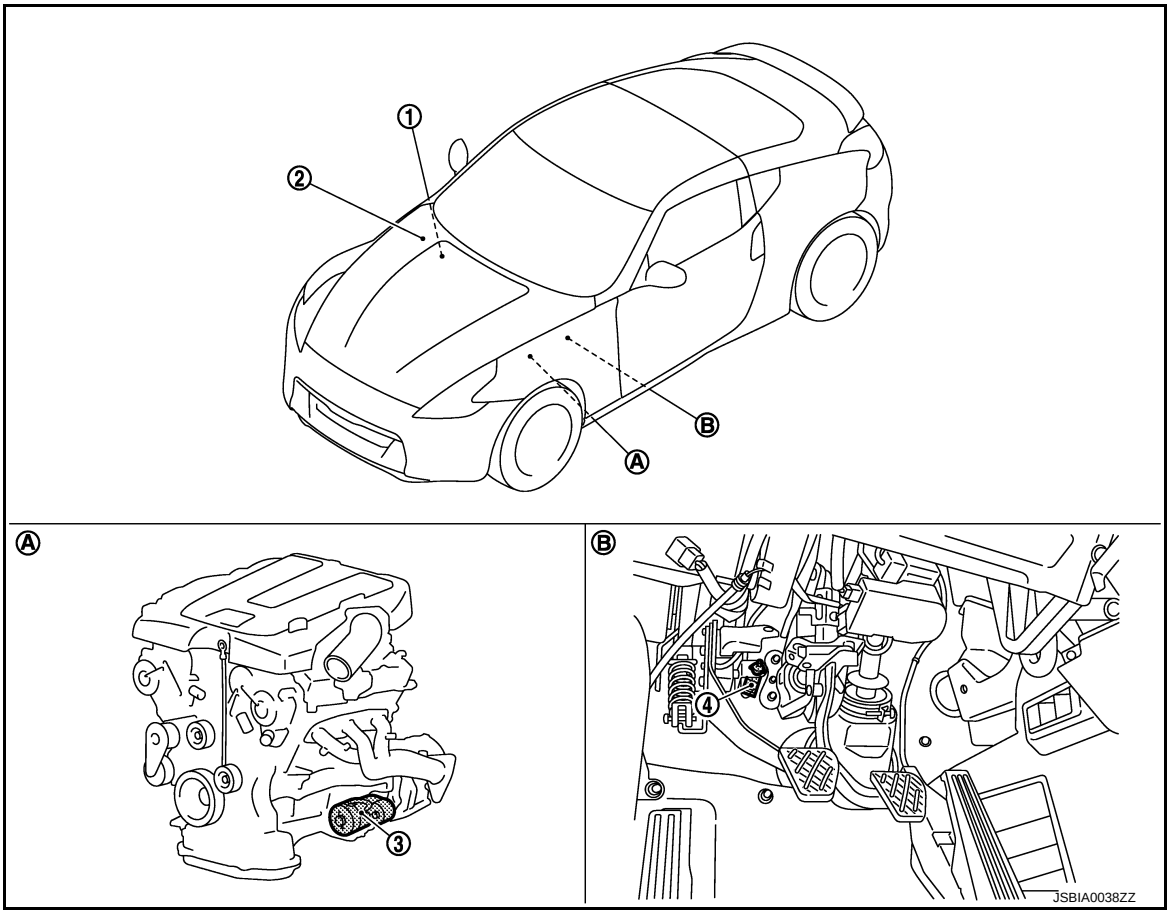

1. BCM
   Refer to BCS-10, "Component Parts Location".
2. IPDM E/R
   Refer to PCS-5, "Component Parts Location".
3. Starter motor
4. Clutch interlock switch

A. Engine
B. Clutch pedal

M/T : Component Description

INFOID:0000000011735113

Component part	Description
Clutch interlock switch	The switch turns ON and electric power is supplied to the starter relay and starter control relay inside IPDM E/R when the clutch pedal is depressed.
BCM	BCM controls the starter relay inside IPDM E/R.
IPDM E/R	CPU inside IPDM E/R controls the starter control relay.
Starter motor	The starter motor plunger closes and the motor is supplied with battery power, which in turn cranks the engine, when the “S” terminal is supplied with electric power.

A/T

A/T : System Diagram

INFOID:0000000011735114

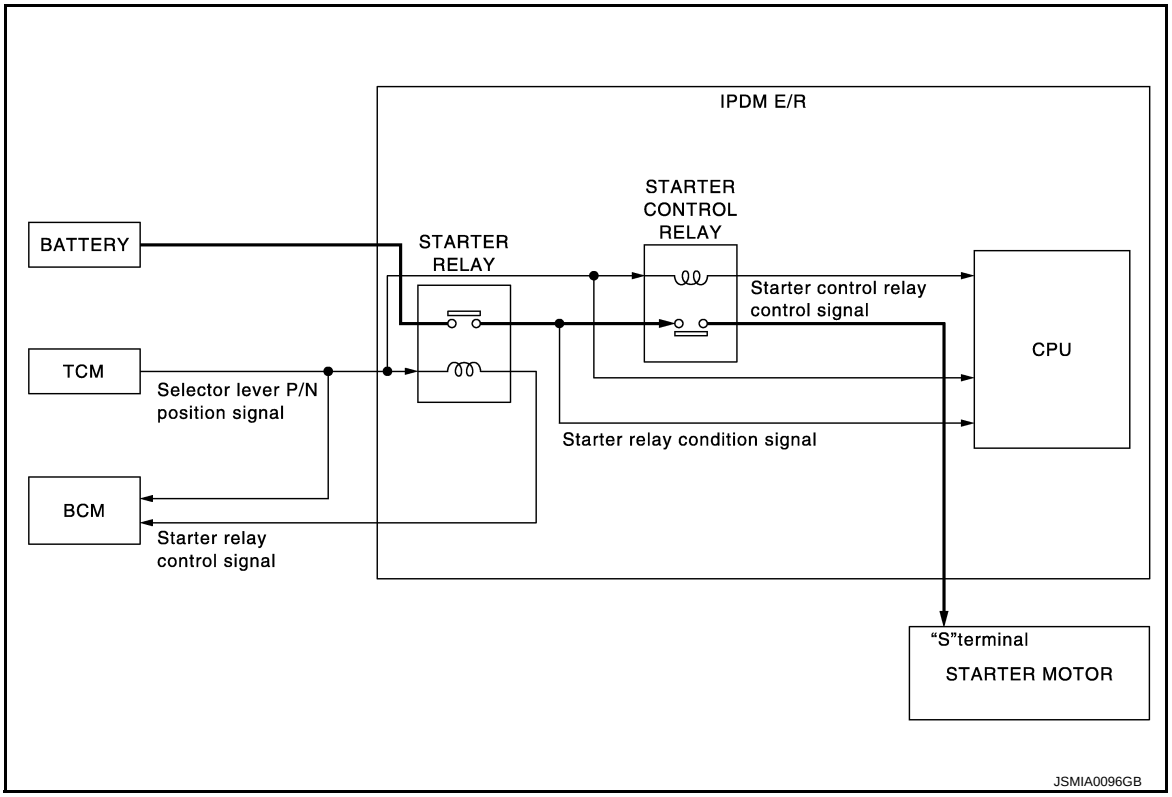

A/T : System Description

INFOID:0000000011735115

- When selector lever is "P" or "N", power is supplied to starter relay and starter control relay by TCM. And BCM and IPDM E/R (CPU) detect selector lever P/N condition by the inputted signal.
- When starter operating condition is satisfied, IPDM E/R turns starter control relay ON by starter control relay control signal.
- When engine cranking condition is satisfied, BCM turns starter relay ON by starter relay control signal.
- Then battery power is supplied to starter motor ("S" terminal) through starter control relay and starter relay. And IPDM E/R (CPU) detect starter relay condition by the inputted signal.

A/T : Component Parts Location

INFOID:0000000011735116

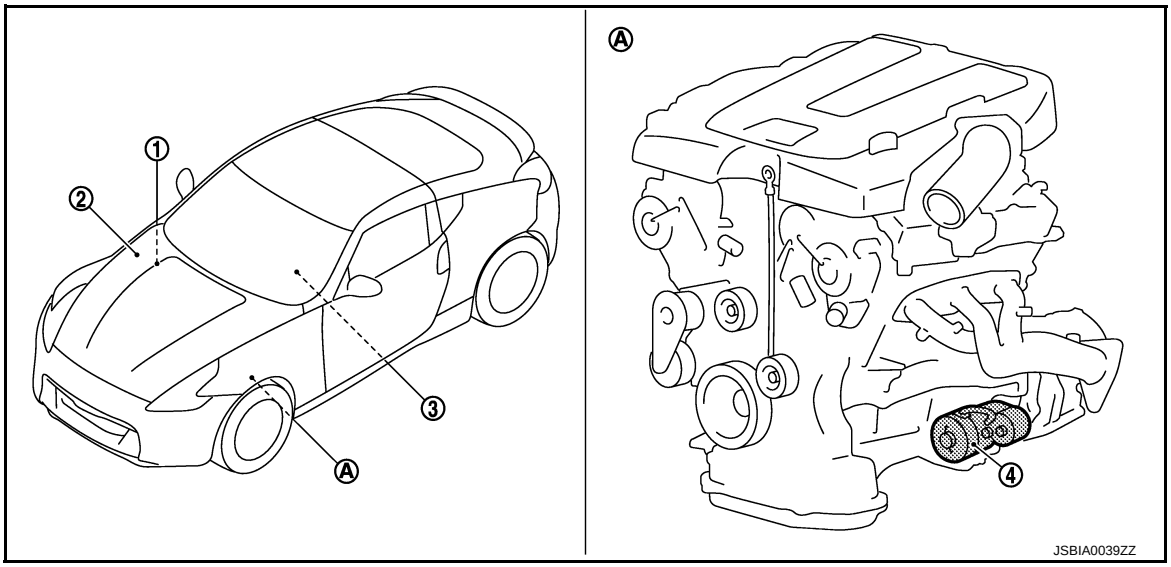

1. BCM
   Refer to BCS-10, "Component Parts Location".
2. IPDM E/R
   Refer to PCS-5, "Component Parts Location".
3. TCM
   Refer to TM-156, "Component Description".
4. Starter motor

A. Engine

A/T : Component Description

INFOID:0000000011735117

Component part	Description
TCM	TCM supplies power to the starter relay and starter control relay inside IPDM E/R when the selector lever is shifted to the “P” or “N” position.
BCM	BCM controls the starter relay inside IPDM E/R.
IPDM E/R	CPU inside IPDM E/R controls the starter control relay.
Starter motor	The starter motor plunger closes and the motor is supplied with battery power, which in turn cranks the engine, when the “S” terminal is supplied with electric power.

DTC/CIRCUIT DIAGNOSIS

B TERMINAL CIRCUIT

Description

INFOID:0000000011735118

The “B” terminal is constantly supplied with battery power.

Diagnosis Procedure

INFOID:0000000011735119

CAUTION:
Perform diagnosis under the condition that engine cannot start by the following procedure.
1. Remove fuel pump fuse.
2. Crank or start the engine (where possible) until the fuel pressure is released.

1. CHECK “B” TERMINAL CIRCUIT

1. Turn ignition switch OFF.
2. Check that starter motor “B” terminal connection is clean and tight.
3. Check voltage between starter motor “B” terminal and ground.

Terminals			Voltage (Approx.)
(+)		(–)	
Starter motor “B” terminal	Terminal		
E204	2	Ground	Battery voltage

Is the inspection result normal?

YES >> GO TO 2.
NO >> Check harness between battery and starter motor for open circuit.

2. CHECK BATTERY CABLE CONNECTION STATUS (VOLTAGE DROP TEST)

1. Shift A/T selector lever to “P” or “N” position. (A/T models)
   Keep depressing clutch pedal fully. (M/T models)
2. Check voltage between battery positive terminal and starter motor “B” terminal.

Terminals			Condition	Voltage (Approx.)
(+)	(–)			
	Starter motor “B” terminal	Terminal		
Battery positive terminal	E204	2	When the ignition switch is in START position	Less than 0.5 V

Is the inspection result normal?

YES >> GO TO 3.
NO >> Check harness between the battery and the starter motor for poor continuity.

3. CHECK GROUND CIRCUIT STATUS (VOLTAGE DROP TEST)

1. Shift A/T selector lever to “P” or “N” position. (A/T models)
   Keep depressing clutch pedal fully. (M/T models)
2. Check voltage between starter motor case and battery negative terminal.

Terminals		Condition	Voltage (Approx.)
(+)	(–)		
Starter motor case	Battery negative terminal	When the ignition switch is in START position	Less than 0.2 V

Is the inspection result normal?

YES >> “B” terminal circuit is OK. Further inspection is necessary. Refer to STR-3, "Work Flow (With GR8-1200 NI)" or STR-6, "Work Flow (Without GR8-1200 NI)".
NO >> Check the starter motor case and ground for poor continuity.

S CONNECTOR CIRCUIT

Description

INFOID:0000000011735120

The starter motor magnetic switch is supplied with power when the ignition switch is turned to the START position while the selector lever is in the “P” or “N” position for A/T models or the clutch pedal is depressed for M/T models.

Diagnosis Procedure

INFOID:0000000011735121

CAUTION:
Perform diagnosis under the condition that engine cannot start by the following procedure.
1. Remove fuel pump fuse.
2. Crank or start the engine (where possible) until the fuel pressure is released.

1. CHECK “S” CONNECTOR CIRCUIT

1. Turn ignition switch OFF.
2. Disconnect starter motor connector.
3. Shift A/T selector lever to “P” or “N” position. (A/T models)
   Keep depressing clutch pedal fully. (M/T models)
4. Check voltage between starter motor harness connector and ground.

Terminals			Condition	Voltage (Approx.)
(+)		(–)		
Starter motor harness connector	Terminal			
F52	1	Ground	When the ignition switch is in START position	Battery voltage

Is the inspection result normal?

YES >> “S” connector circuit is OK. Further inspection is necessary. Refer to STR-3, "Work Flow (With GR8-1200 NI)" or STR-6, "Work Flow (Without GR8-1200 NI)".

NO >> GO TO 2.

2. CHECK HARNESS CONTINUITY (OPEN CIRCUIT)

1. Disconnect IPDM E/R connector.
2. Check continuity between starter motor harness connector and IPDM E/R harness connector.

Starter motor harness connector		IPDM E/R harness connector		Continuity
Connector No.	Terminal No.	Connector No.	Terminal No.	
F52	1	E7	80	Existed

Is the inspection result normal?

YES >> Further inspection is necessary. Refer to STR-3, "Work Flow (With GR8-1200 NI)" or STR-6, "Work Flow (Without GR8-1200 NI)".

NO >> Repair the harness.

STARTING SYSTEM

Wiring Diagram - STARTING SYSTEM -

INFOID:0000000011735122

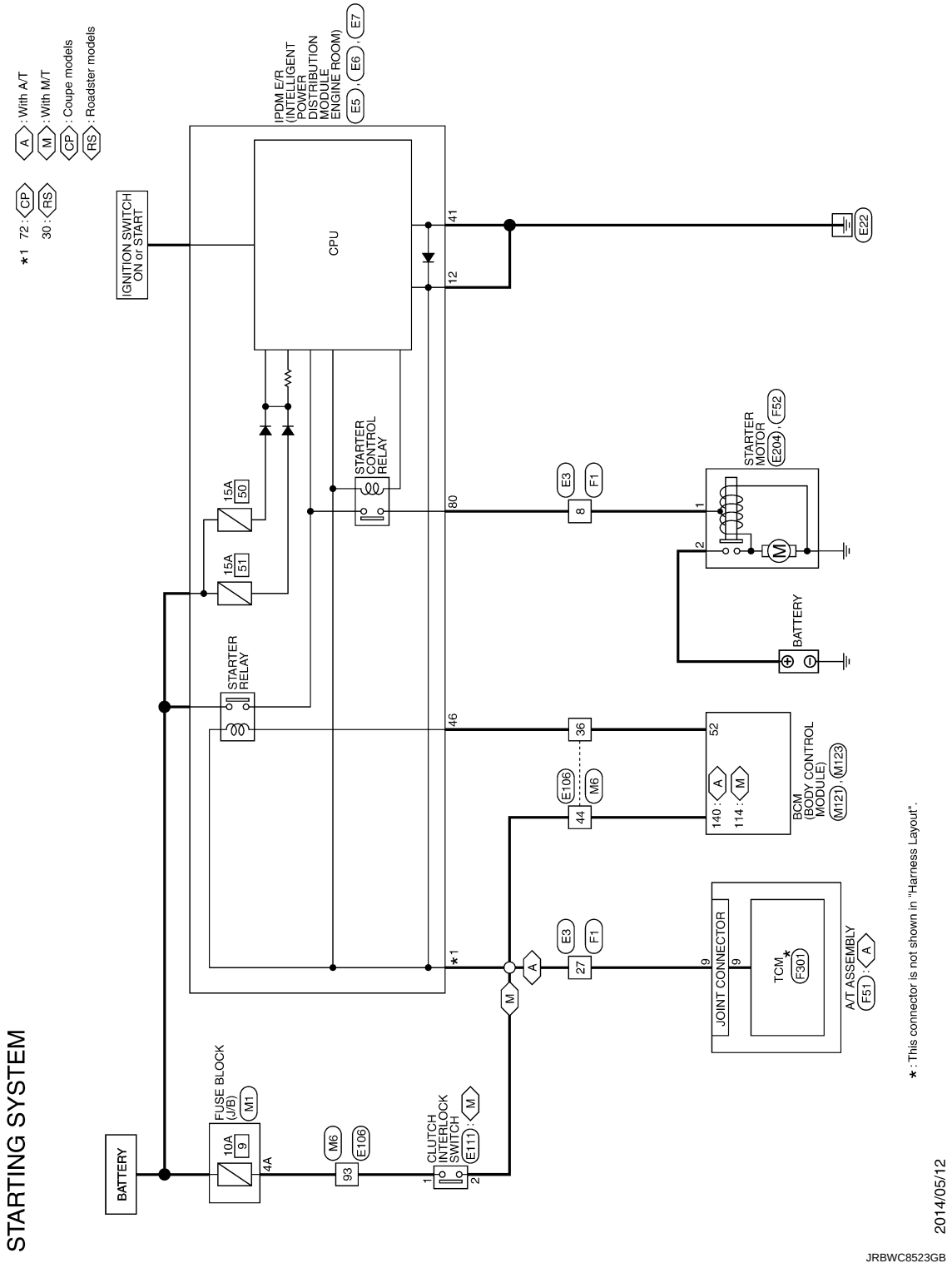

STARTING SYSTEM

Connector No.	E3
Connector Name	WIRE TO WIRE
Connector Type	SAA36MB-RS8-SHZ8

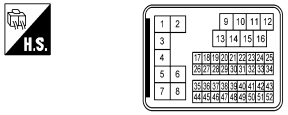

Terminal No.	Color Of Wire	Signal Name [Specification]
1	L/Y	-
2	SHIELD	-
3	L/B	-
4	SHIELD	-
5	BR	-
7	G	-
8	W	-
9	W	-
10	Y	-
11	V	-
12	SB	-
13	L	-
14	G	-
15	R	-
16	LG	-
17	GR	-
18	Y	-
19	BG	-
20	B	-
21	SB	-
22	G	-
23	SB	-
24	GR	-
25	V	-
27	GR	-
28	V	-
29	L	-
30	R	-
31	BR	-
32	Y	-
33	SB	-
34	BG	-
36	GR	-
37	SHIELD	-
38	L	-
39	P	-
40	R	-
41	W	-
42	LG	-
43	G	-
45	SB	-
46	SHIELD	-
47	W	-
48	BR	-
49	G	-
50	B	-
51	SB	-
52	R	-

Connector No.	E5
Connector Name	IPDM E/R (INTELLIGENT POWER DISTRIBUTION MODULE ENGINE ROOM)
Connector Type	TH20FW-CS12-M4-1V

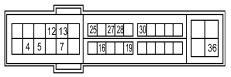

Terminal No.	Color Of Wire	Signal Name [Specification]
4	V	-
5	L	-
7	R	- [Coupe models]
7	V	- [Roadster models]
12	B/W	-
13	Y	-
16	LG	-
19	W	-
25	G	-
27	Y	-
28	L	-
30	GR	-
36	G	-

Connector No.	E6
Connector Name	IPDM E/R (INTELLIGENT POWER DISTRIBUTION MODULE ENGINE ROOM)
Connector Type	TH08FW-NH

Terminal No.	Color Of Wire	Signal Name [Specification]
39	P	-
40	L	-
41	B/W	-
42	Y	-
43	SB	-
44	W	-
45	G	-
46	V	-

Connector No.	E7
Connector Name	IPDM E/R (INTELLIGENT POWER DISTRIBUTION MODULE ENGINE ROOM)
Connector Type	TH20FW-CS12-M4

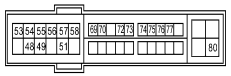

Terminal No.	Color Of Wire	Signal Name [Specification]
48	L	-
49	BG	-
51	Y	-
53	W	-
54	V	-
55	SB	-
56	LG	-
57	G	-
58	P	-
69	BR	-
70	BG	-
72	GR	-
73	GR	-
74	G	-
75	SB	-
76	Y	-
77	R	-
80	W	-

Connector No.	E106
Connector Name	WIRE TO WIRE
Connector Type	TH80FW-CS16-TM4

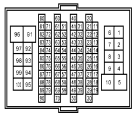

Terminal No.	Color Of Wire	Signal Name [Specification]
1	Y	-
3	L	-
4	L	-
7	B	-
8	P	-
9	B	-
11	V	-
12	R	-
13	L	-
14	GR	-
15	P	-
16	W	-
17	SB	-
20	LG	-
21	BR	- [Coupe models]
21	G	- [Roadster models]
31	L	-
32	Y	-
36	V	-
37	Y	-
38	R	-
39	B	-
40	W	-
41	LG	-
42	SB	-
43	G	-

JRBWD3347GB

STARTING SYSTEM

44	GR	- [Except for roadster models with M/T]
44	R	- [Roadster models with M/T]
45	BG	-
46	W	-
47	P	-
58	SHIELD	-
59	L	-
70	P	-
80	W	-
81	P	-
82	G	-
83	V	-
84	L	-
85	BG	-
86	LG	-
87	R	-
89	P	-
91	W	-
92	L	-
93	G	-
94	Y	-
96	Y	-
98	GR	-
99	LG	-
100	BG	-

Connector No.	E111
Connector Name	CLUTCH INTERLOCK SWITCH
Connector Type	S02FL

Terminal No.	Color Of Wire	Signal Name [Specification]
1	G	-
2	GR	-

Connector No.	E204
Connector Name	STARTER MOTOR
Connector Type	24348_51E61

Terminal No.	Color Of Wire	Signal Name [Specification]
2	B/Y	-

Connector No.	F1
Connector Name	WIRE TO WIRE
Connector Type	SAA36FB-RS8-SHZ8

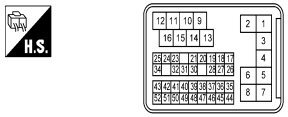

Terminal No.	Color Of Wire	Signal Name [Specification]
1	L/Y	-
2	SHIELD	-
3	L/B	-
4	SHIELD	-
5	BR	-
7	G	-
8	W	-
9	W	-
10	G	-
11	R	-
12	P	-
13	O	-
14	LG	-
15	BR	-
16	Y	-
17	W	-
18	LG	-
19	P	-
20	O	-
21	BR	-
22	G	-
23	Y	-
24	LG	-
25	V	-
27	GR	-
28	BR	-
29	L	-
30	R	-
31	P	-
32	W	-
33	SB	-
34	O	-
36	GR	-
37	SHIELD	-
38	W	-
39	Y	-
40	G	-
41	B	-
42	GR	-
43	R	-
45	SB	-
46	SHIELD	-
47	W/L	-
48	LG	-
49	O/L	-
50	L/Y	-
51	W	-
52	L/G	-

Connector No.	F51
Connector Name	A/T ASSEMBLY
Connector Type	RK10FG-DGY

Terminal No.	Color Of Wire	Signal Name [Specification]
1	Y	IGNITION POWER SUPPLY
2	BR	BATTERY POWER SUPPLY (MEMORY BACK-UP)
3	L	CAN-H
4	V	K-LINE
5	B	GROUND
6	Y	IGNITION POWER SUPPLY
7	W	BACK-UP LAMP RELAY
8	P	CAN-L
9	GR	STARTER RELAY
10	B	GROUND

Connector No.	F52
Connector Name	STARTER MOTOR
Connector Type	X01MGY

Terminal No.	Color Of Wire	Signal Name [Specification]
1	W	-

Connector No.	F301
Connector Name	TCM
Connector Type	SP10FG

Terminal No.	Color Of Wire	Signal Name [Specification]
1	W	IGNITION POWER SUPPLY
2	B	BATTERY POWER SUPPLY (MEMORY BACK-UP)
3	R	CAN-H
4	O	K-LINE
5	G	GROUND
6	GR	IGNITION POWER SUPPLY
7	L	BACK-UP LAMP RELAY
8	BR	CAN-L
9	Y	STARTER RELAY
10	W/B	GROUND

JRBWD3348GB

STARTING SYSTEM

Connector No.	M1
Connector Name	FUSE BLOCK (J/B)
Connector Type	NS06FW-M2

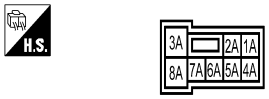

Terminal No.	Color Of Wire	Signal Name [Specification]
1A	V	-
2A	G	-
3A	L	-
4A	P	-
5A	L	-
6A	Y	-
7A	BR	-
8A	L	-

Connector No.	M6
Connector Name	WIRE TO WIRE
Connector Type	TH80MW-CS16-TM4

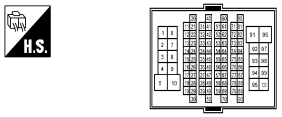

Terminal No.	Color Of Wire	Signal Name [Specification]
1	Y	-
3	L	-
4	L	-
7	B	-
8	P	-
9	B	-
11	GR	-
12	R	-
13	L	-
14	G	-
15	P	-
16	W	-
17	BR	-
20	GR	-
21	R	-
31	BR	-
32	V	-
36	SB	-
37	Y	-
38	LG	-
39	SB	-
40	W	-
41	LG	-
42	R	-
43	G	-
44	G	- [With A/T]
44	R	- [With M/T]
45	O	-
46	G	-
47	BR	-
58	SHIELD	-
59	L	-
70	R	-
80	LG	-
81	GR	-
82	V	-
83	V	-
84	L	-
85	BR	-
86	Y	-
87	G	-
89	P	-
91	W	-
92	P	-
93	P	-
94	Y	-
96	P	-
98	O	-
99	W	-
100	R	-

Connector No.	M121
Connector Name	BCM (BODY CONTROL MODULE)
Connector Type	TH40FGY-NH

Terminal No.	Color Of Wire	Signal Name [Specification]
34	G	LUGGAGE/TRUNK ROOM ANT-
35	R	LUGGAGE/TRUNK ROOM ANT+
38	B	REAR BUMPER ANT-
39	W	REAR BUMPER ANT+
47	V	IGN RELAY (IPDM E/R) CONT
52	SB	STARTER RELAY CONT
60	BR	PUSH SW
61	W	BACK DOOR/TRUNK LID DOOR REQUEST SW
64	G	I-KEY WARN BUZZER (ENG ROOM)
66	R	BACK DOOR/TRUNK ROOM LAMP SW
67	GR	BACK DOOR/TRUNK LID OPENER SW

Connector No.	M123
Connector Name	BCM (BODY CONTROL MODULE)
Connector Type	TH40FG-NH

Terminal No.	Color Of Wire	Signal Name [Specification]
113	O	OPTICAL SENSOR
114	R	CLUTCH INTERLOCK SW
115	O	-
116	SB	STOP LAMP SW 1
118	P	STOP LAMP SW 2
119	SB	DR DOOR UNLOCK SENSOR
121	R	KEY SLOT SW
123	W	IGN F/B
124	LG	PASSENGER DOOR SW
129	O	TRUNK LID OPENER CANCEL SW
130	L	REAR DEFOGGER SW
132	V	P/W SW & SOFT TOP C/U COMM [Roadster models]
132	Y	POWER WINDOW SW COMM [Coupe models]
133	G	PUSH BUTTON IGNITION SW ILL POWER
134	GR	LOCK IND
137	P	RECEIVER &SENSOR GND
138	V	RECEIVER & SENSOR POWER SUPPLY
139	L	TIRE PRESS RECEIV COMM
140	G	P/N POSITION
141	Y	SECURITY INDICATOR
142	O	COMBI SW OUTPUT 5
143	P	COMBI SW OUTPUT 1
144	G	COMBI SW OUTPUT 2
145	L	COMBI SW OUTPUT 3
146	SB	COMBI SW OUTPUT 4
150	GR	DRIVER DOOR SW
151	G	REAR WINDOW DEFOGGER RELAY CONT

JRBWD3349GB

SYMPTOM DIAGNOSIS

STARTING SYSTEM

Symptom Table

INFOID:0000000011735123

Symptom	Reference
No normal cranking	Refer to STR-3, "Work Flow (With GR8-1200 NI)" or STR-6, "Work Flow (Without GR8-1200 NI)".
Starter motor does not rotate	

PRECAUTION

PRECAUTIONS

EXCEPT FOR MEXICO

EXCEPT FOR MEXICO : Precaution for Supplemental Restraint System (SRS) "AIR BAG" and "SEAT BELT PRE-TENSIONER"

INFOID:0000000011735124

The Supplemental Restraint System such as “AIR BAG” and “SEAT BELT PRE-TENSIONER”, used along with a front seat belt, helps to reduce the risk or severity of injury to the driver and front passenger for certain types of collision. This system includes seat belt switch inputs and dual stage front air bag modules. The SRS system uses the seat belt switches to determine the front air bag deployment, and may only deploy one front air bag, depending on the severity of a collision and whether the front occupants are belted or unbelted.
Information necessary to service the system safely is included in the “SRS AIR BAG” and “SEAT BELT” of this Service Manual.

WARNING:

Always observe the following items for preventing accidental activation.

- **To avoid rendering the SRS inoperative, which could increase the risk of personal injury or death in the event of a collision that would result in air bag inflation, all maintenance must be performed by an authorized NISSAN/INFINITI dealer.**
- **Improper maintenance, including incorrect removal and installation of the SRS, can lead to personal injury caused by unintentional activation of the system. For removal of Spiral Cable and Air Bag Module, see “SRS AIR BAG”.**
- **Never use electrical test equipment on any circuit related to the SRS unless instructed to in this Service Manual. SRS wiring harnesses can be identified by yellow and/or orange harnesses or harness connectors.**

PRECAUTIONS WHEN USING POWER TOOLS (AIR OR ELECTRIC) AND HAMMERS

WARNING:

Always observe the following items for preventing accidental activation.

- **When working near the Air Bag Diagnosis Sensor Unit or other Air Bag System sensors with the ignition ON or engine running, never use air or electric power tools or strike near the sensor(s) with a hammer. Heavy vibration could activate the sensor(s) and deploy the air bag(s), possibly causing serious injury.**
- **When using air or electric power tools or hammers, always switch the ignition OFF, disconnect the battery, and wait at least 3 minutes before performing any service.**

EXCEPT FOR MEXICO : Precaution for Battery Service

INFOID:0000000011735125

Before disconnecting the battery, lower both the driver and passenger windows. This will prevent any interference between the window edge and the vehicle when the door is opened/closed. During normal operation, the window slightly raises and lowers automatically to prevent any window to vehicle interference. The automatic window function will not work with the battery disconnected.

EXCEPT FOR MEXICO : Precaution for Procedure without Cowl Top Cover

INFOID:0000000011735126

When performing the procedure after removing cowl top cover, cover the lower end of windshield with urethane, etc to prevent damage to windshield.

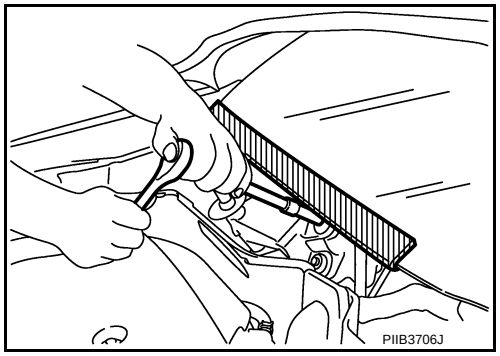

EXCEPT FOR MEXICO : Precautions For Xenon Headlamp Service

INFOID:0000000011735127

WARNING:

Comply with the following warnings to prevent any serious accident.

- **Disconnect the battery cable (negative terminal) or the power supply fuse before installing, removing, or touching the xenon headlamp (bulb included). The xenon headlamp contains high-voltage generated parts.**
- **Never work with wet hands.**
- **Check the xenon headlamp ON-OFF status after assembling it to the vehicle. Never turn the xenon headlamp ON in other conditions. Connect the power supply to the vehicle-side connector. (Turning it ON outside the lamp case may cause fire or visual impairments.)**
- **Never touch the bulb glass immediately after turning it OFF. It is extremely hot.**

CAUTION:

Comply with the following cautions to prevent any error and malfunction.

- **Install the xenon bulb securely. (Insufficient bulb socket installation may melt the bulb, the connector, the housing, etc. by high-voltage leakage or corona discharge.)**
- **Never perform HID circuit inspection with a tester.**
- **Never touch the xenon bulb glass with hands. Never put oil and grease on it.**
- **Dispose of the used xenon bulb after packing it in thick vinyl without breaking it.**
- **Never wipe out dirt and contamination with organic solvent (thinner, gasoline, etc.).**

EXCEPT FOR MEXICO : Precautions for Removing Battery Terminal

INFOID:0000000011735128

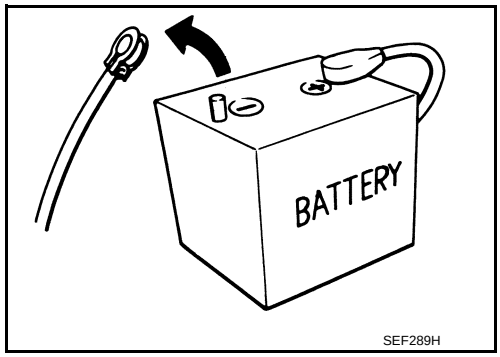

- When removing the 12V battery terminal, turn OFF the ignition switch and wait at least 30 seconds.
  NOTE:
  ECU may be active for several tens of seconds after the ignition switch is turned OFF. If the battery terminal is removed before ECU stops, then a DTC detection error or ECU data corruption may occur.
- For vehicles with the 2-batteries, be sure to connect the main battery and the sub battery before turning ON the ignition switch.
  NOTE:
  If the ignition switch is turned ON with any one of the terminals of main battery and sub battery disconnected, then DTC may be detected.
- After installing the 12V battery, always check "Self Diagnosis Result" of all ECUs and erase DTC.
  NOTE:
  The removal of 12V battery may cause a DTC detection error.

FOR MEXICO

FOR MEXICO : Precaution for Supplemental Restraint System (SRS) "AIR BAG" and "SEAT BELT PRE-TENSIONER"

INFOID:0000000011735129

The Supplemental Restraint System such as “AIR BAG” and “SEAT BELT PRE-TENSIONER”, used along with a front seat belt, helps to reduce the risk or severity of injury to the driver and front passenger for certain types of collision. Information necessary to service the system safely is included in the “SRS AIR BAG” and “SEAT BELT” of this Service Manual.

WARNING:

Always observe the following items for preventing accidental activation.

- **To avoid rendering the SRS inoperative, which could increase the risk of personal injury or death in the event of a collision that would result in air bag inflation, all maintenance must be performed by an authorized NISSAN/INFINITI dealer.**
- **Improper maintenance, including incorrect removal and installation of the SRS, can lead to personal injury caused by unintentional activation of the system. For removal of Spiral Cable and Air Bag Module, see “SRS AIR BAG”.**
- **Never use electrical test equipment on any circuit related to the SRS unless instructed to in this Service Manual. SRS wiring harnesses can be identified by yellow and/or orange harnesses or harness connectors.**

PRECAUTIONS WHEN USING POWER TOOLS (AIR OR ELECTRIC) AND HAMMERS

WARNING:

Always observe the following items for preventing accidental activation.

- **When working near the Air Bag Diagnosis Sensor Unit or other Air Bag System sensors with the ignition ON or engine running, never use air or electric power tools or strike near the sensor(s) with a hammer. Heavy vibration could activate the sensor(s) and deploy the air bag(s), possibly causing serious injury.**
- **When using air or electric power tools or hammers, always switch the ignition OFF, disconnect the battery, and wait at least 3 minutes before performing any service.**

FOR MEXICO : Precaution for Battery Service

INFOID:0000000011735130

Before disconnecting the battery, lower both the driver and passenger windows. This will prevent any interference between the window edge and the vehicle when the door is opened/closed. During normal operation, the window slightly raises and lowers automatically to prevent any window to vehicle interference. The automatic window function will not work with the battery disconnected.

FOR MEXICO : Precaution for Procedure without Cowl Top Cover

INFOID:0000000011735131

When performing the procedure after removing cowl top cover, cover the lower end of windshield with urethane, etc to prevent damage to windshield.

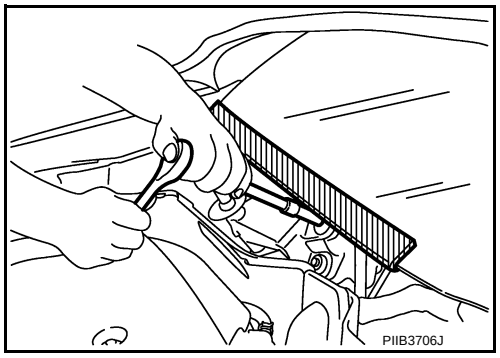

FOR MEXICO : Precautions For Xenon Headlamp Service

INFOID:0000000011735132

WARNING:

Comply with the following warnings to prevent any serious accident.

- **Disconnect the battery cable (negative terminal) or the power supply fuse before installing, removing, or touching the xenon headlamp (bulb included). The xenon headlamp contains high-voltage generated parts.**
- **Never work with wet hands.**
- **Check the xenon headlamp ON-OFF status after assembling it to the vehicle. Never turn the xenon headlamp ON in other conditions. Connect the power supply to the vehicle-side connector. (Turning it ON outside the lamp case may cause fire or visual impairments.)**
- **Never touch the bulb glass immediately after turning it OFF. It is extremely hot.**

CAUTION:

Comply with the following cautions to prevent any error and malfunction.

- **Install the xenon bulb securely. (Insufficient bulb socket installation may melt the bulb, the connector, the housing, etc. by high-voltage leakage or corona discharge.)**
- **Never perform HID circuit inspection with a tester.**
- **Never touch the xenon bulb glass with hands. Never put oil and grease on it.**
- **Dispose of the used xenon bulb after packing it in thick vinyl without breaking it.**
- **Never wipe out dirt and contamination with organic solvent (thinner, gasoline, etc.).**

FOR MEXICO : Precautions for Removing Battery Terminal

INFOID:0000000011735133

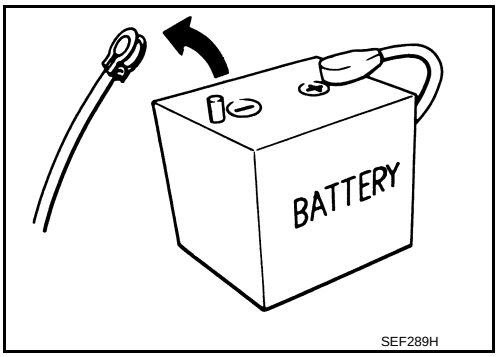

- When removing the 12V battery terminal, turn OFF the ignition switch and wait at least 30 seconds.
  NOTE:
  ECU may be active for several tens of seconds after the ignition switch is turned OFF. If the battery terminal is removed before ECU stops, then a DTC detection error or ECU data corruption may occur.
- For vehicles with the 2-batteries, be sure to connect the main battery and the sub battery before turning ON the ignition switch.
  NOTE:
  If the ignition switch is turned ON with any one of the terminals of main battery and sub battery disconnected, then DTC may be detected.
- After installing the 12V battery, always check "Self Diagnosis Result" of all ECUs and erase DTC.
  NOTE:
  The removal of 12V battery may cause a DTC detection error.

PREPARATION

PREPARATION

Special Service Tools

INFOID:0000000011735134

Tool number (Kent-Moore No.) Tool name	Description
— (—) Model GR8-1200 NI Multitasking battery and electrical diagnostic station  AWIIA1239ZZ	Tests batteries, starting and charging systems and charges batteries. For operating instructions, refer to diagnostic station instruction manual.

Commercial Service Tools

INFOID:0000000011735135

Tool name	Description
Power tool 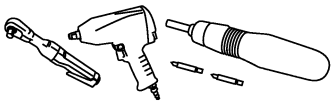 PIIB1407E	Loosening bolts, nuts and screws

REMOVAL AND INSTALLATION

STARTER MOTOR

Exploded View

INFOID:0000000011735136

REMOVAL

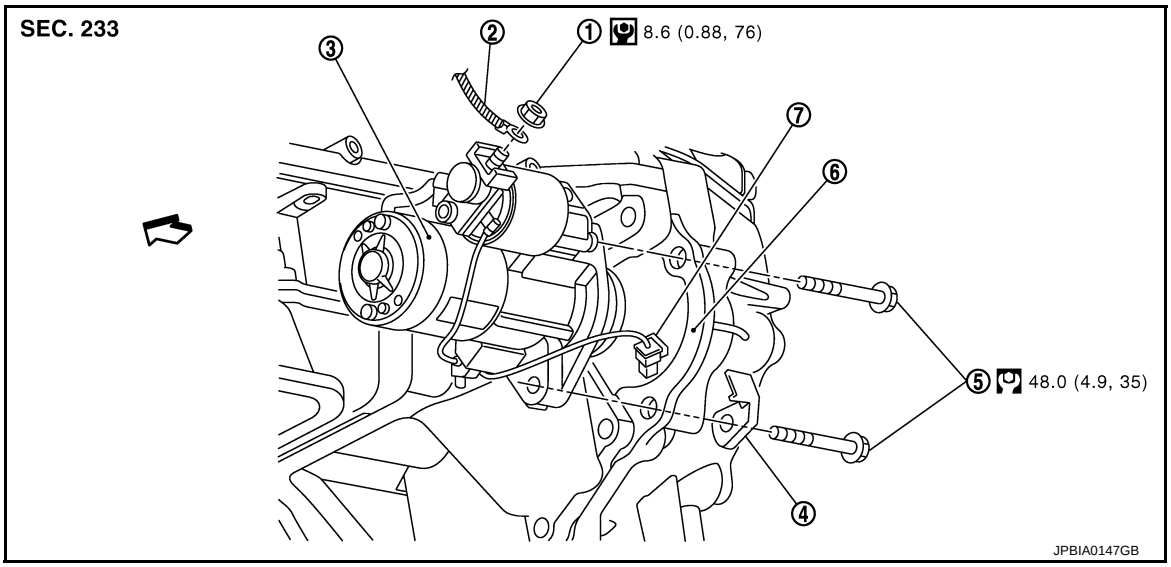

1. “B” terminal nut
2. “B” terminal harness
3. Starter motor
4. Harness clip bracket
5. Starter motor mounting bolt
6. Converter housing (A/T models)
   Transmission case (M/T models)
7. “S” connector

⇦ : Engine front

: N·m (kg-m, ft-lb)

: N·m (kg-m, in-lb)

DISASSEMBLY

Type: S114-932

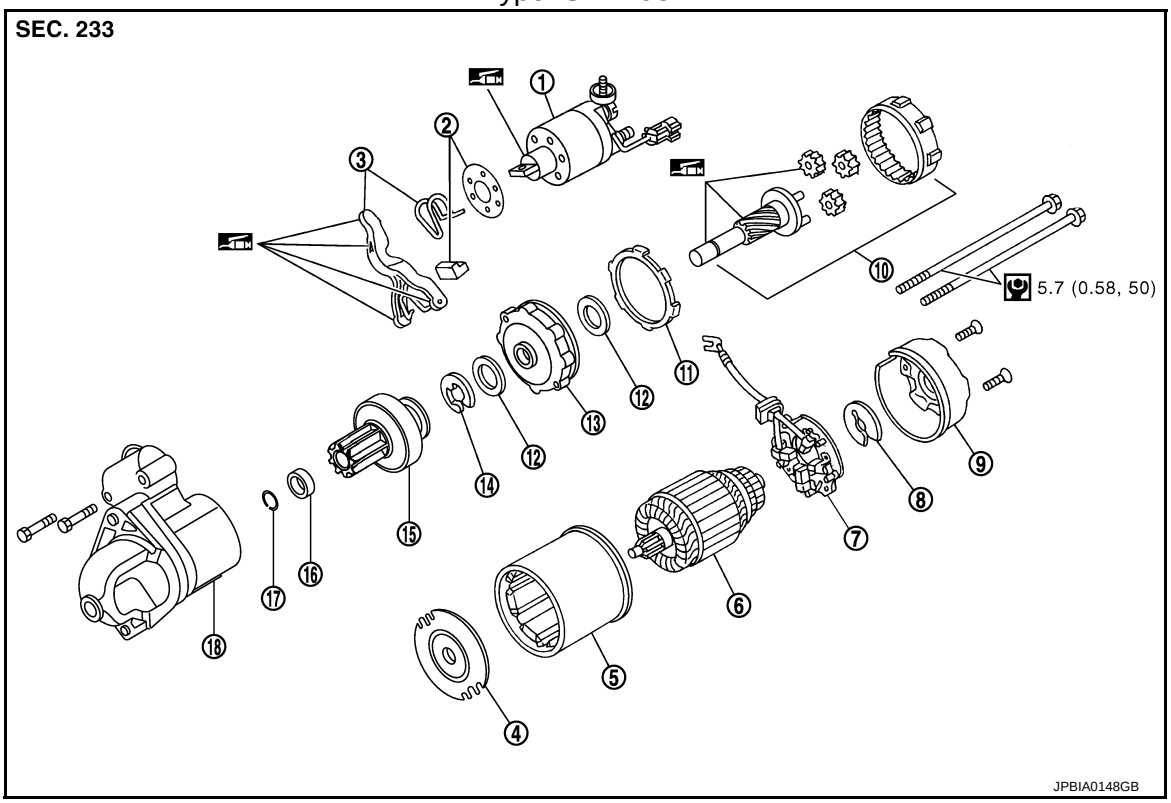

1. Magnetic switch assembly	2. Dust cover kit	3. Shift lever set
4. Center bracket (A)	5. Yoke assembly	6. Armature assembly
7. Brush holder assembly	8. Thrust washer	9. Rear cover assembly
10. Shaft gear assembly	11. Packing	12. Thrust washer
13. Center bracket (P)	14. E-ring	15. Pinion assembly
16. Pinion stopper	17. Pinion stopper clip	18. Gear case assembly

: High-temperature grease point

: N·m (kg-m, in-lb)

NOTE:
Apply high-temperature grease to lubricate the bearing, gears and frictional surface when assembling the starter.

M/T

M/T : Removal and Installation

INFOID:0000000011735137

Removal

1. Disconnect the battery cable from the negative terminal. Refer to PG-106, "Removal and Installation".
2. Remove engine undercover using power tools.
3. Remove “B” terminal nut (1).

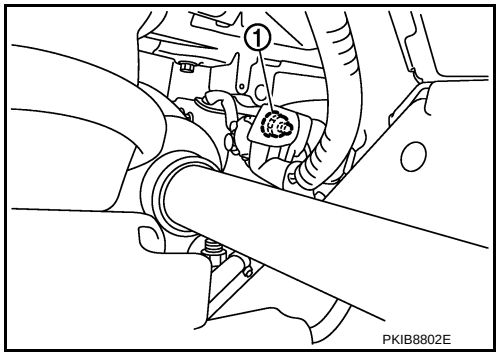

4. Disconnect “S” connector (A).
5. Remove starter motor mounting bolts (B) and harness bracket, using power tools.

⇦ : Vehicle front

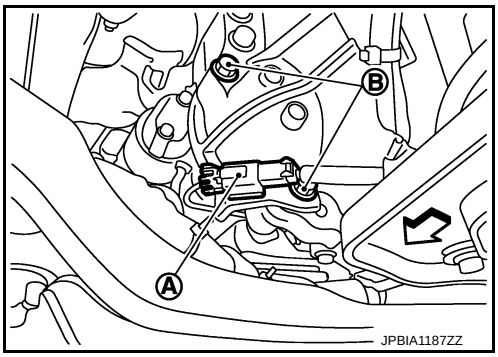

6. Remove starter motor (1) forward from the vehicle.

⇦ : Vehicle front

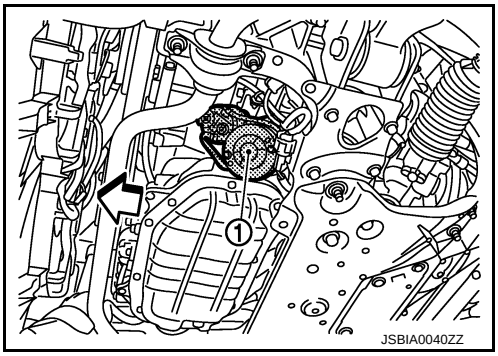

INSTALLATION

Install in the reverse order of removal.

CAUTION:

Be sure to tighten “B” terminal nut carefully.

A/T

A/T : Removal and Installation

INFOID:0000000011735138

Removal

1. Disconnect the battery cable from the negative terminal. Refer to PG-106, "Removal and Installation".
2. Remove engine undercover using power tools.
3. Remove “B” terminal nut (1).

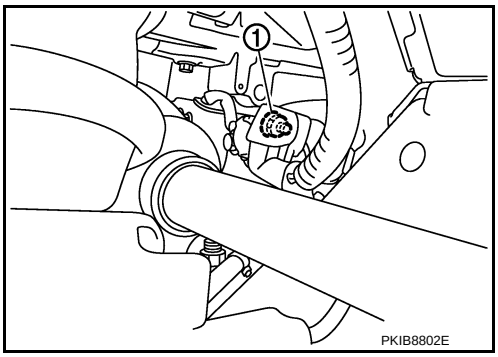

4. Disconnect “S” connector (A).
5. Remove starter motor mounting bolts (B) and harness bracket, using power tools.

⇦ : Vehicle front

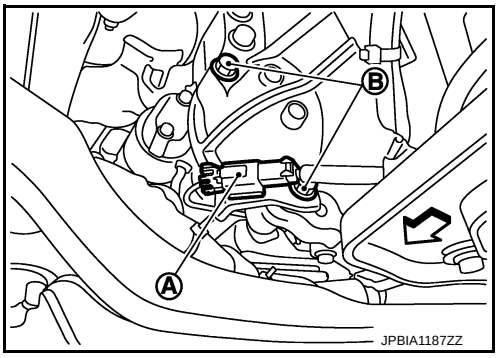

6. Remove the bolt (A) and remove the harness bracket (1).

⇦ : Vehicle front

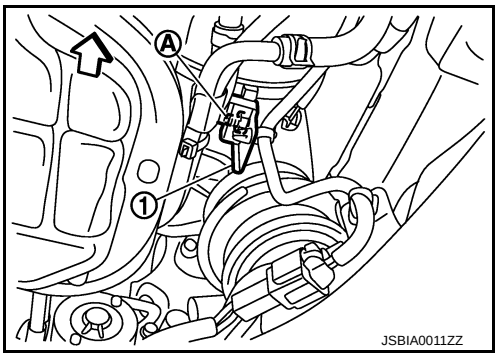

7. Remove A/T fluid cooler tube clip bolts and bracket. Refer to TM-348, "Exploded View".
8. Move A/T fluid cooler tube (1) downward.
9. Remove starter motor (2) forward from the vehicle.

⇦ : Vehicle front

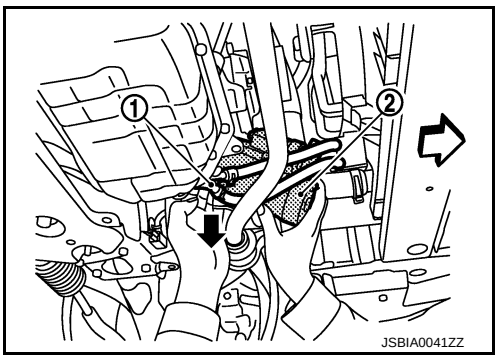

INSTALLATION

Install in the reverse order of removal.

CAUTION:

Be sure to tighten “B” terminal nut carefully.

SERVICE DATA AND SPECIFICATIONS (SDS)

SERVICE DATA AND SPECIFICATIONS (SDS)

Starter Motor

INFOID:0000000011735139

Type			S114-932
			HITACHI make
			Reduction gear type
System voltage		[V]	12
No-load	Terminal voltage	[V]	11
	Current	[A]	Less than 110
	Revolution	[rpm]	More than 2,700